SYM	REVISION	BY	DATE	ECN
A	ENGINEERING RELEASE	AGJ	5-26-93	22833
B	(4A)NOTE 2 WAS MOUNTING TYPE: F	AGJ	5/13/02	41044
C	-1)(7C)50.3[1.98] WAS 48.6[1.91] -2)(6B)58.7[2.31] WAS 56.9[2.24] -3)(7B)REMOVED 7.6[.30] MAX -4)(8B)ADDED 113.0 [4.45] MAX -5)(7C)ADDED 94.7 [3.73] MAX -6)(6B)59.5[2.34] WAS 57.7[2.27]	AAB	3-17-11	M81589

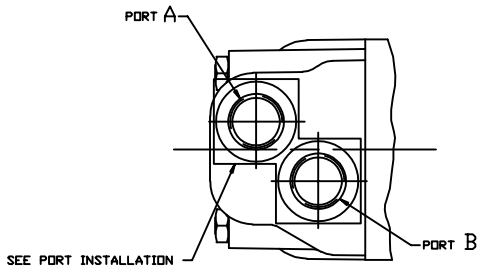

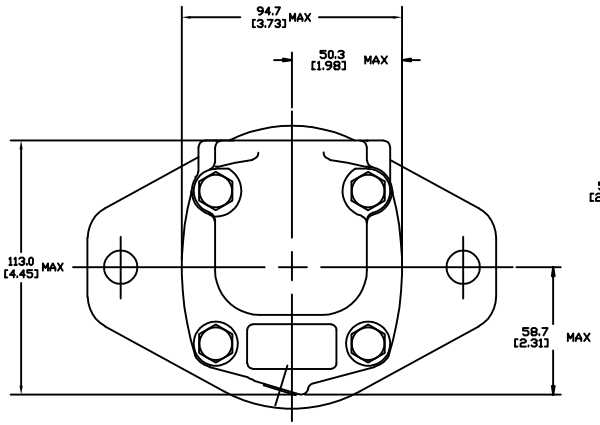

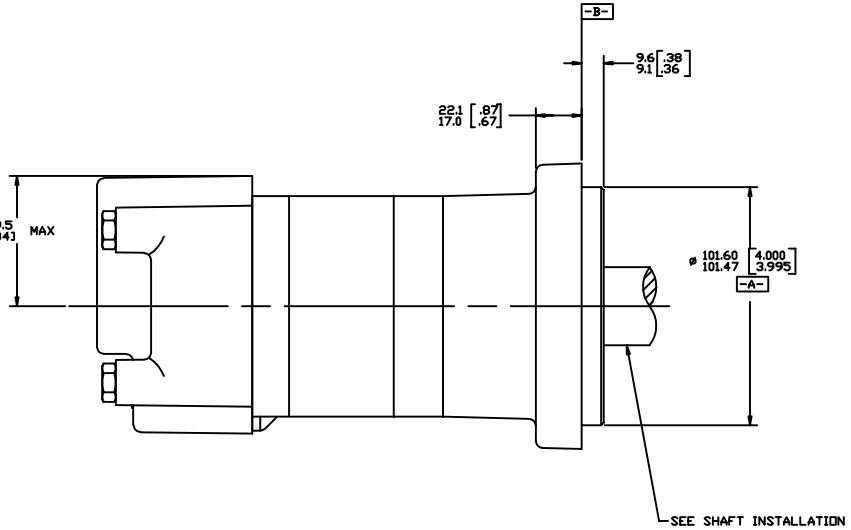

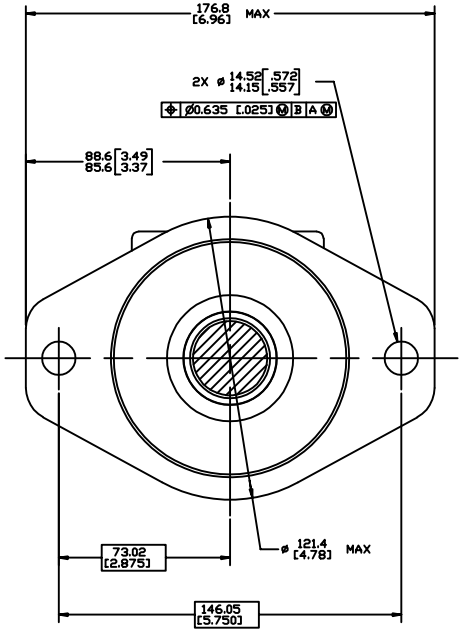

NOTE

1 ROTATION:
STANDARD: WHEN FACING SHAFT END OF MOTOR, SHAFT TO ROTATE;
CLOCKWISE WHEN PORT "A" IS PRESSURIZED
COUNTERCLOCKWISE WHEN PORT "B" IS PRESSURIZED

REVERSE: WHEN FACING SHAFT END OF MOTOR, SHAFT TO ROTATE;
CLOCKWISE WHEN PORT "B" IS PRESSURIZED
COUNTERCLOCKWISE WHEN PORT "A" IS PRESSURIZED

2 MOUNTING TYPE: AF
STANDARD, 2 BOLT: ø 101.6 [4.00] PILOT
ø 14.35 [.565] HOLES ON ø 146.0 [5.75]
BOLT CIRCLE "SAE B"

REVIEWED FOR CLASSIFICATION PER ESP-042

DRAWING BASED ON ANSI Y14.5M-1982

UNLESS OTHERWISE SPECIFIED ALL DIMENSIONS ARE IN INCHES ☐ MILLIMETERS ☒ UNLESS

TOLERANCES
.X = ±
.XX = ±REF
.XXX = ±ONLY
∠ = ±

UNSPECIFIED RADII ARE

UNSPECIFIED DRAFT ANGLES ARE

D SIZE

EATON CORPORATION - CONFIDENTIAL AND PROPRIETARY
NOTICE TO PERSONS RECEIVING THIS DRAWING
IN OR TECHNICAL INFORMATION

DRAWN BY/DATE A. JOHNSON 3-2-93
CHECKED BY/DATE SJH 6-24-93
ENGR BY/DATE SJZ 6-28-93
METALLURGY BY/DATE

THIRD ANGLE PROJECTION

DO NOT SCALE

MATERIAL/HEAT TREAT

TITLE
2000 SERIES MOTOR INSTALL

REFERENCE ☐ REVISION ☐ NUMBER

NUMBER A-667-001

ARITHMETICAL AVERAGE

SCALE 1/1 SHEET 1 OF 1